CPTP412R - 12 ft. Traffic Camera Pole | Breakaway Pedestal Base

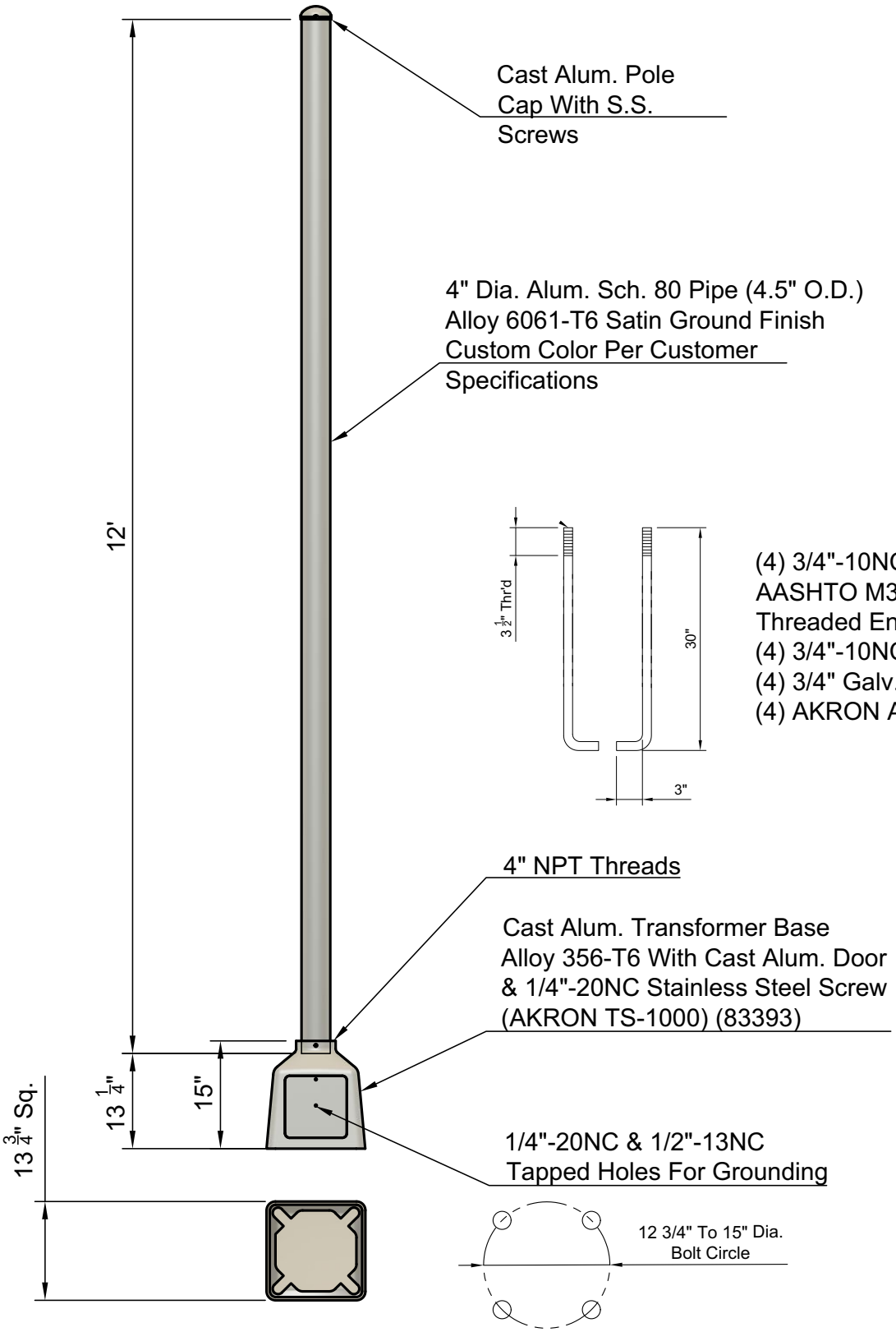

CAMERAPOLES
800 E. Northwest Highway Suite 700 | Palatine, IL 60074 | (888)364-8802 | CameraPoles.org